# *(Embedded System Lab)*

## EXPERIMENT NO: 03

**Aim**: Interfacing of a DC motor (speed and Direction control) with arduino uno.

**Apparatus**: Computer, Proteus software, Arduino IDE, Virtual L293D Motor Driver IC, Virtual DC motor and virtual Arduino board.

## Theory:

The easiest and inexpensive way to control DC motors is to interface the L293D Motor Driver IC with the Arduino. It can control both the speed and the spinning direction of two DC motors.it can also control a unipolar stepper motor like the 28BYJ-48 or a bipolar stepper motor like the NEMA 17.

**1) Speed Control:** PWM allows the Arduino to simulate analog output by rapidly toggling a digital pin ON and OFF. By varying the duty cycle of the PWM signal, the average voltage applied to the motor can be adjusted, thus controlling its speed. **Arduino Uno has six PWM pins (3, 5, 6, 9, 10, and 11),** which can be used for this purpose. "**When enable 1(E1) pin gets high motor 1 ready to run**"

**2) Direction Control:** To control the direction of the DC motor, two digital pins of the Arduino are used. By setting one pin high and the other low, or vice versa, the motor can be made to rotate in either direction.

To have complete control over DC motor we have to control its speed and rotation direction. This can be achieved by combining these two techniques.

- **PWM** – to control speed
- **H-Bridge** – to control the rotation direction

**L293D Motor Driver IC:** The L293D is a dual-channel H-Bridge motor driver capable of driving a pair of DC motors or a single stepper motor. This means it can drive up to two motors individually which makes it ideal for building a two-wheeled robotic platform. **(VCC= voltage at the common collector) Voltage Symmetrization System (VSS).**

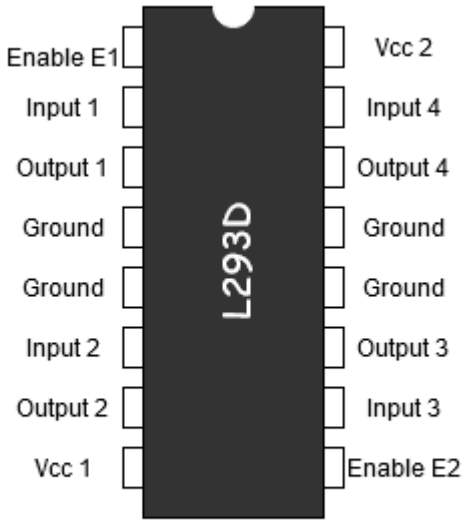


pin description of L293D motor driver

## Components: (Just for understanding)

### Arduino Uno R3;

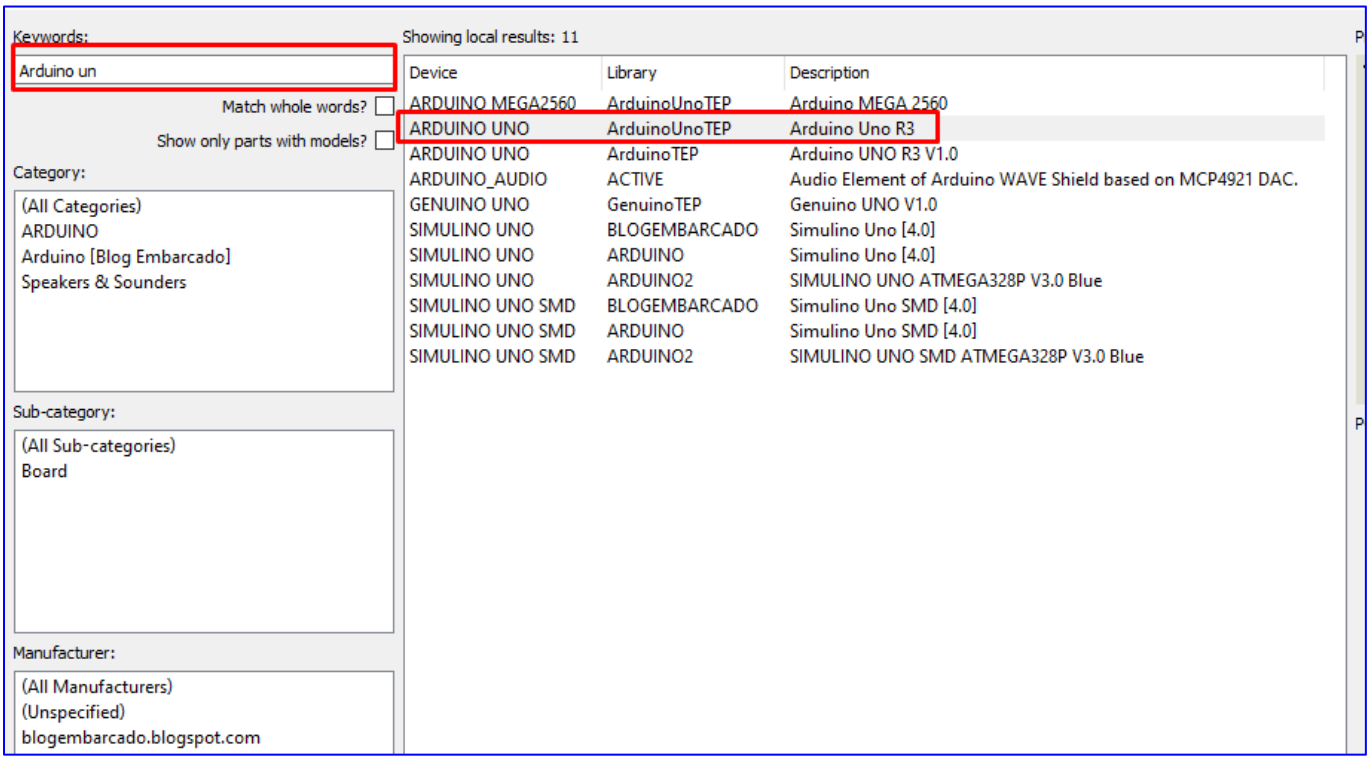


### L293D Motor Driver IC:

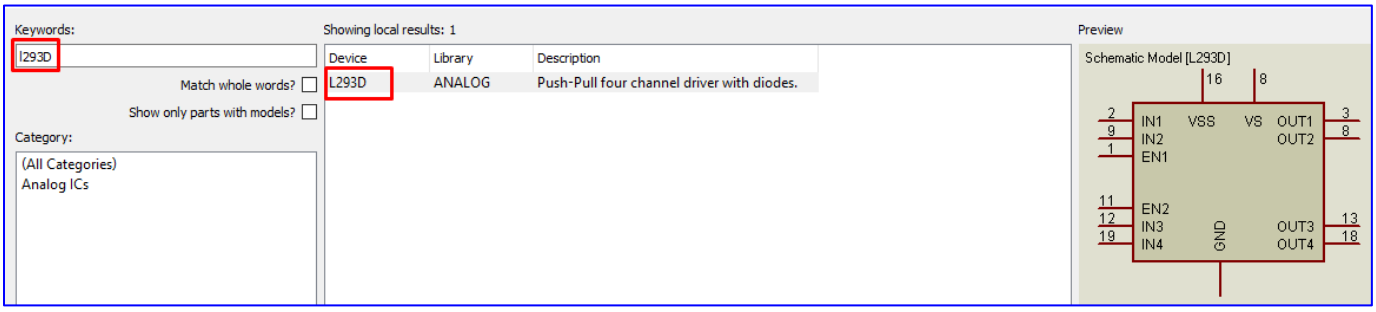


### DC Motor:

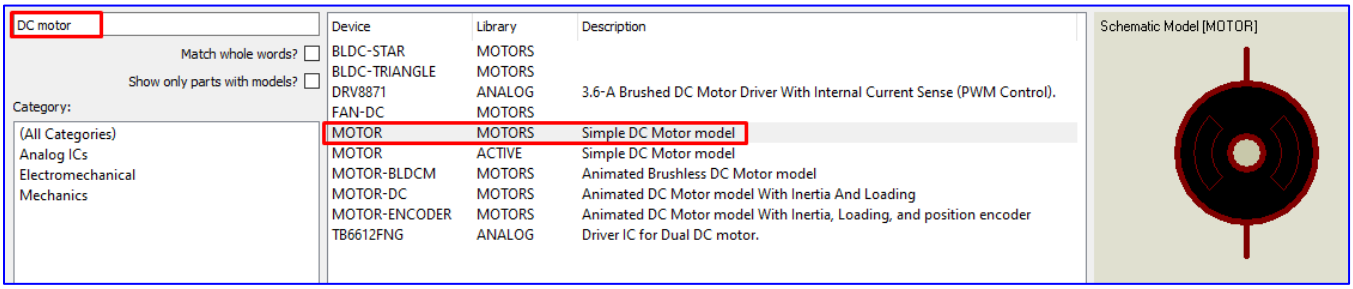

## Program:

//**const** = constant, value cannot be changed once it is initialized.

// **int** = integer,Integers are whole numbers, only positive, negative, or zero, but without any decimal points.

// rpm= revolutions per minute

---

```
// Define motor pins
const int motorPin1 = 9;  // PWM pin for speed control
const int motorPin2 = 10; // Direction pin 1  (for direction control)
const int motorPin3 = 11; // Direction pin 2  (for direction control)

void setup() {
  // Initialize motor pins as outputs
  pinMode(motorPin1, OUTPUT);
  pinMode(motorPin2, OUTPUT);
  pinMode(motorPin3, OUTPUT);
}

void loop() {
  // Set direction
  digitalWrite(motorPin2, HIGH);  // Clockwise rotation or forward direction
  digitalWrite(motorPin3, LOW);

  // Vary speed using PWM //analogWrite (LED brightnesses or motor speed Adjustment)
  analogWrite(motorPin1, 150);// Adjust the PWM value (0-255) for desired speed.2^8=256

  delay(2000);  // 2 seconds delay

  // Change direction
  digitalWrite(motorPin2, LOW);   // Counter-clockwise rotation or Reverse direction
  digitalWrite(motorPin3, HIGH);

  // Vary speed using PWM
  analogWrite(motorPin1, 200);  // Adjust the PWM value (0-255) for desired speed

  delay(2000);  // 2 seconds delay
}
```

## Output:

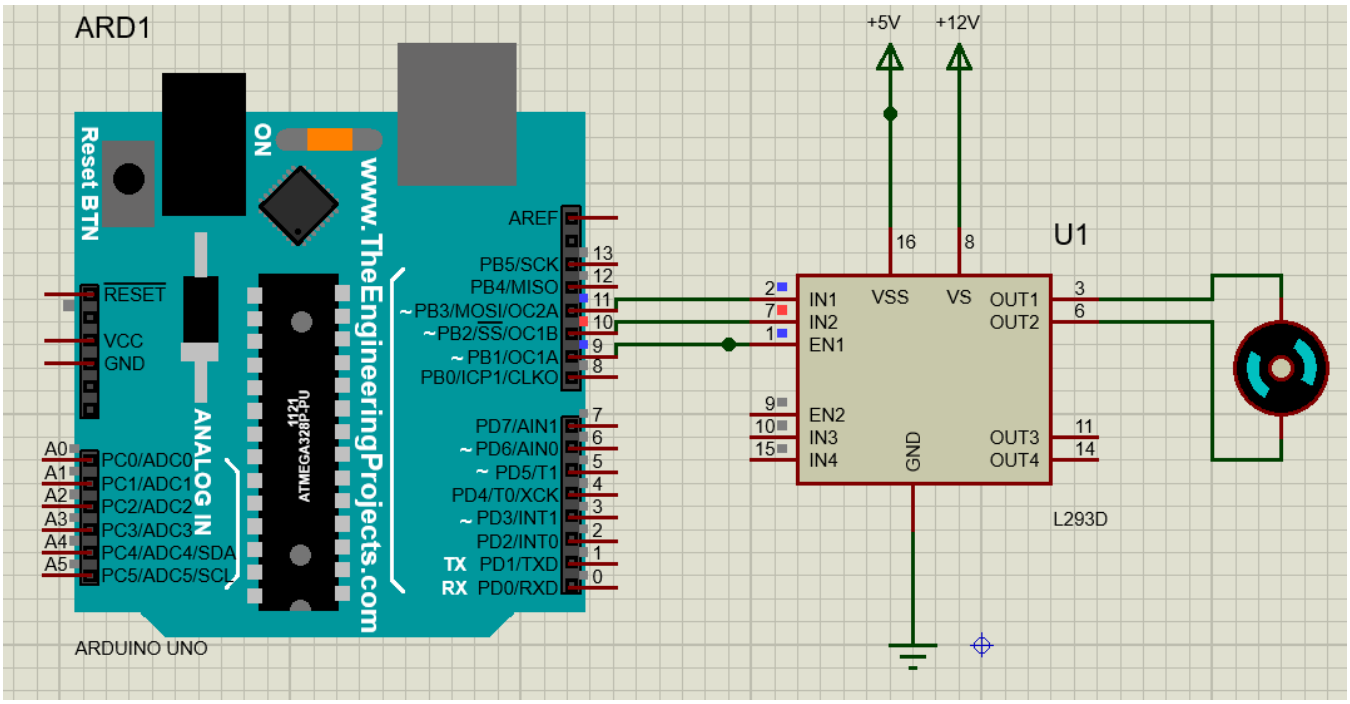


## Conclusion:

In conclusion, the Arduino Uno can effectively interface with a DC motor for both speed and direction control using PWM for speed regulation and digital pins for directional control. By adjusting the PWM signal's duty cycle and setting the appropriate digital pins, the motor's speed and direction can be manipulated as desired.